The Shredder

A Report by

Don Smeller
10BitWorks

To

James Regan
The DoSeum

July 27, 2018

Sieve

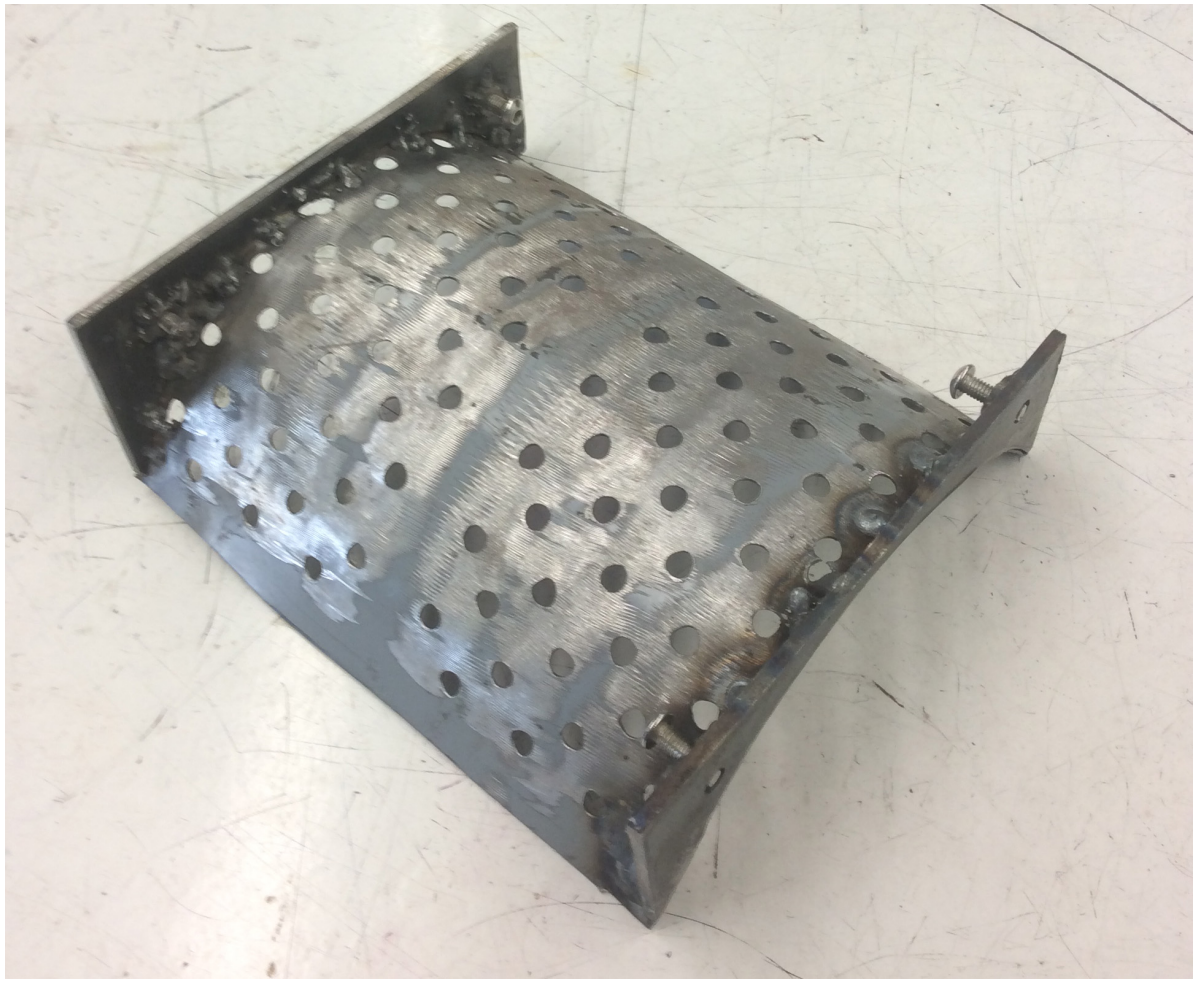

1. Mild Steel
2. 104 holes, .188”diam
3. 4 screws, 4mm diam
4. 2.5mm Allen head wrench
5. The holes in the body of the shredder are not tapped.
6. Other dimensions different
7. The screws jack against the body.
8. Screws loosen during use.
9. Need to be retightened
10. Need thread lock
11. Yet to make SS version
12. Capability to weld SS being acquired

Too Fine?

1. Powdery particles melt differently.
2. Powdery particles get left behind by injection screw
3. Tea strainer
4. Separate the wheat from the chaff.

Tools

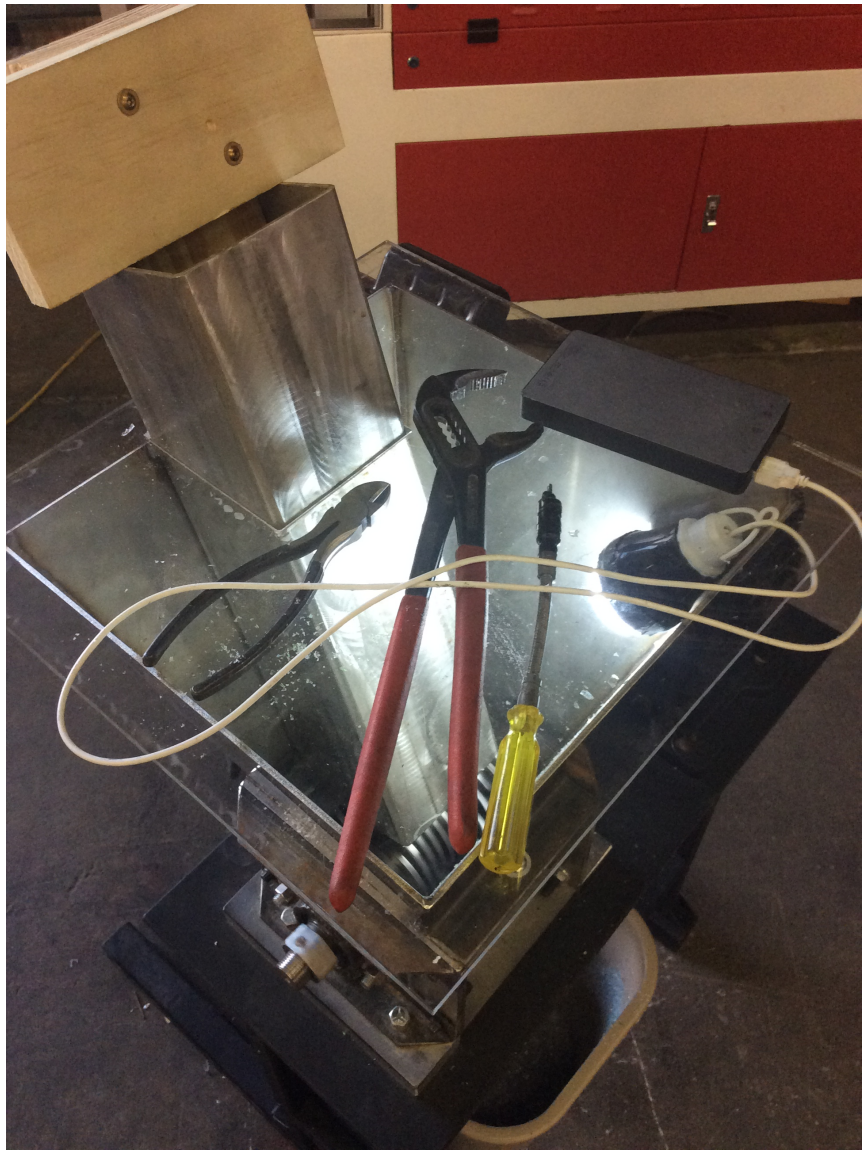

1. Clear Lid (needs to be thicker, radius corners)
2. LED Light Bulb
3. USB battery
4. Diagonal Cutters for ring & label
5. Lock Joint Pliers
6. Flexible shaft screwdriver with 2.5 mm Allen
7. Wooden blocks (need to secure)
8. Catch Basket
9. Tea strainer
10. Mixing bowl

Jammed!%$*(@

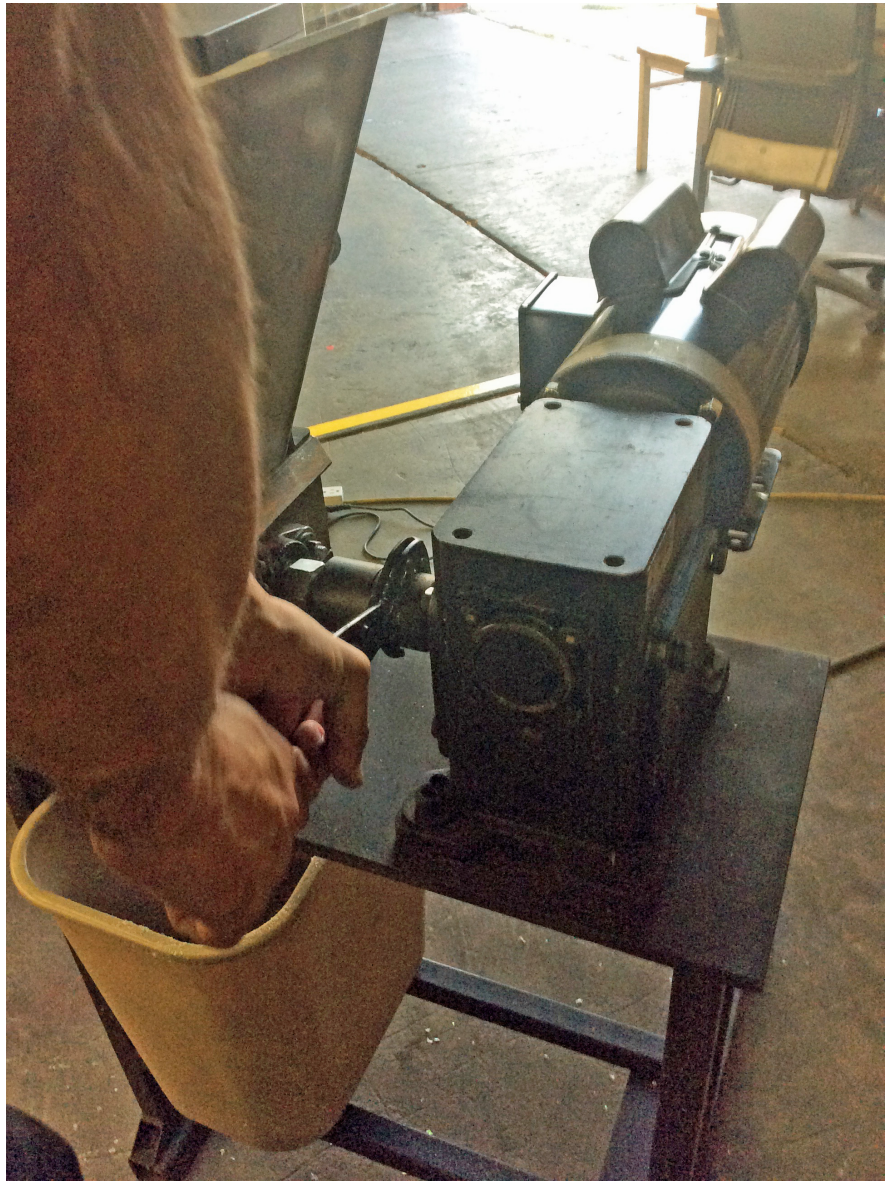

1. Hummm. Turn off switch
2. Inevitable
3. Rotate backwards
4. Longer Wrench
5. Rewire: Reversing switch

RECYCLE

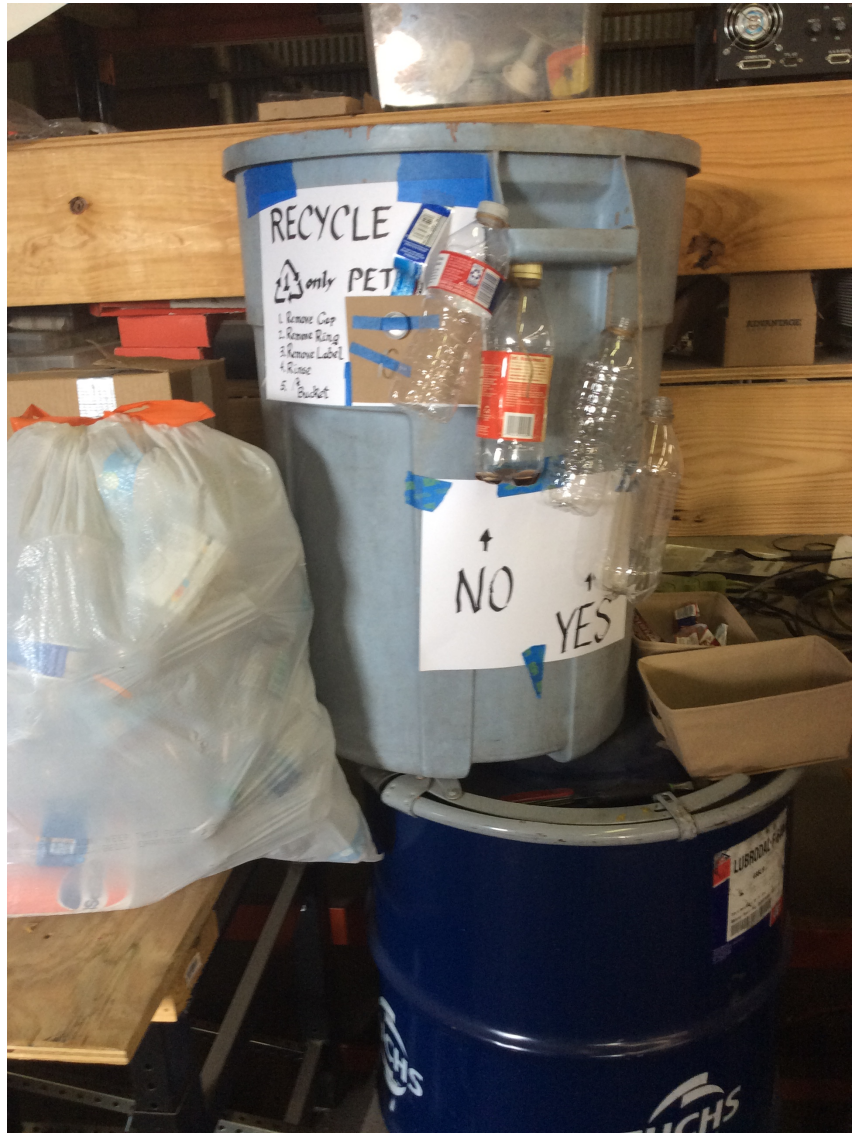

1. **PET only**
2. **Bag holds 1 pound**
3. **Remove cap**
4. **Remove ring**
5. **Remove label**
6. **Rinse out sugar**
7. **Air dry**

Progress on Compression

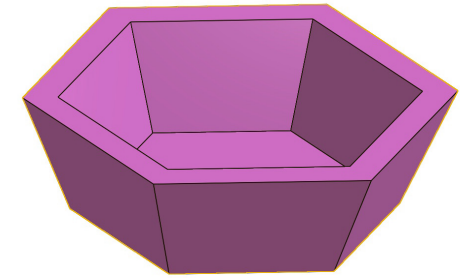

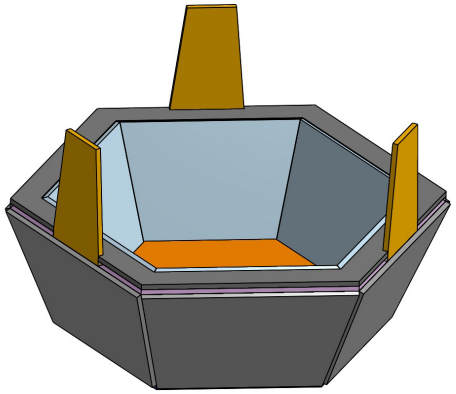

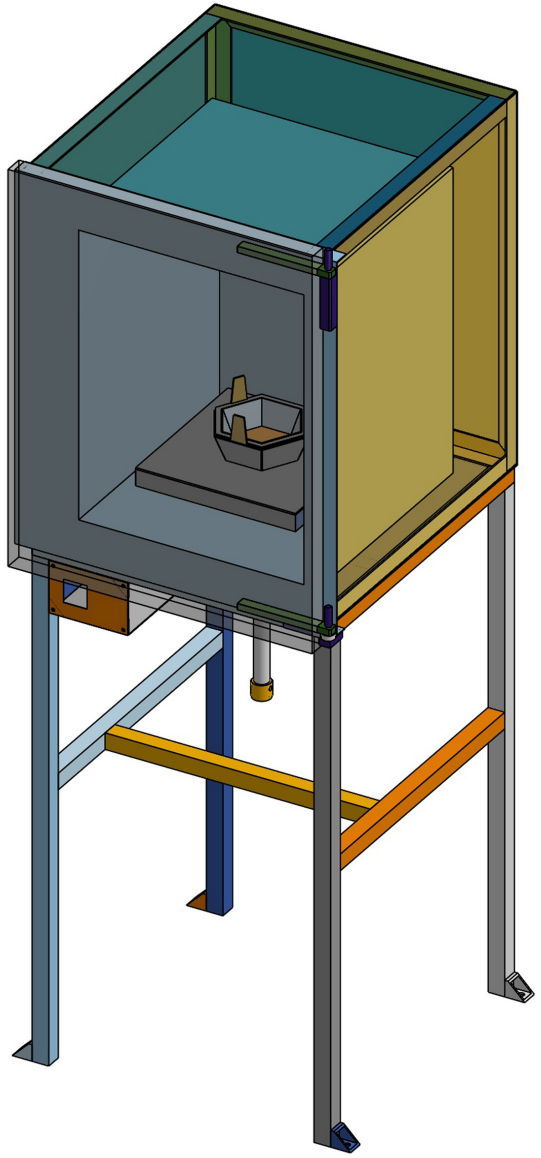

1. **Bowl & mold designed**
2. **1.000 Pound of PET**
3. **Not food grade.**

4. **Oven stripped**
5. **Oven frame cut / welded**
6. **Frame stand cut**
7. **Platform cut / welded**
8. **Control box cut**