From: **Don Smeller** donsmeller@earthlink.net
Subject: Saturday 6/13 at 10Bit
Date: June 14, 2015 at 8:42 AM
To: 10BitWorks sa-hackerspace@googlegroups.com
Cc: Peggy Guillory pguillory424@gmail.com, Militza Cunningham mrhc1228@yahoo.com, George Smeller gsmeller@hotmail.com, barbara fuchs bjfuchs@earthlink.net
Bcc: Don Smeller donsmeller@earthlink.net

Head count 15:

Art painters group 3: Don S, Peggy, Militza. Peggy finished her first of five commissioned watercolor Christmas cards. The final step involved bending back the bristles of a large filbert brush and flinging minute droplets of white paint at an otherwise finished globe ornament.

Art jewelers group 2: Sue, Kevin. Kevin worked on a technique to fashion rings from silver wire. He coiled the wire around a mandrel to make a spring-like helix. Then he sliced the spring length-wise to get a pile of single coil helixes equivalent in shape to lock washers with a round section. Last he placed the single coils, one at a time on a large plate of aluminum and heated them with a blue flame until the silver got to a soft state. At the final magic moment, the single coil helix transformed: it laid down flat and fused into a ring all in a split second.

Art casting group 1: James is bent on casting an aluminum chess set using a lost PLA technique. He hot-melt glued a runner onto the 3D printed PLA chess piece and submerged the assemblage in wet plaster of Paris. After some shaking and baking the plaster set rock-hard and bubble-free around the piece. James hacked a toaster oven to generate a high enough temperature to melt the PLA out of the mold. The final aluminum casting step was saved for another day.

First Time Visitors 3:

Tony is an Army EMT trainer at Camp Bullis with interest in making a water driven motor generator pump 5 foot heart recirc thingy. He needs tools and space and know how. We got that; he joined up. Welcome Tony.

Mike is an Air Force pilot, in town for training before his next assignment in Las Vegas. Sans-wife-and-kids-for-a-month, he's got a quad-copter to fill any spare time. His personal XYZprinting daVinci isn't fast enough to keep up with the inevitable carnage of a flying session. So Mike wanted to learn how to use both the laser cutter and the cnc mill (Shapeoko). The test piece was a "BasePlate" that he'd designed. Mike has a master's degree in electrical engineering, so his learning curve is straight up. He grabbled his CAD files from the cloud and in two hours he learned enough Corel Draw, Inkscape, Autodesk, Laser Cut 5.3, Easel, and Universal-Gcode-Sender to make a usable BasePlate on each machine. He also cut out a stylized skull for his quad copter and some cardboard christmas ornaments to be sent home to the family. I'm glad this guy is on our side.

Another Tony?, Jonathan's Dad, He has a project in his head that will require the use of the Shapeoko. He's on a mission. He'll be back.

Robotics Club 3D Printer Build Group 4: Jonathan, Angie, Dominic, Andres. The high schoolers are into the wire-it-up stage. Andy discovered we are out of wire braid to cover the wires. No problem, visitor Mike had some in his truck. It's a maker community!

3D Printer Users 1: Jeremy wanted two Thingiverse objects printed (attached png). They hold a 35mm slide and a lens, I think. We put the grandfather printer to work. The new reel holder works slick.

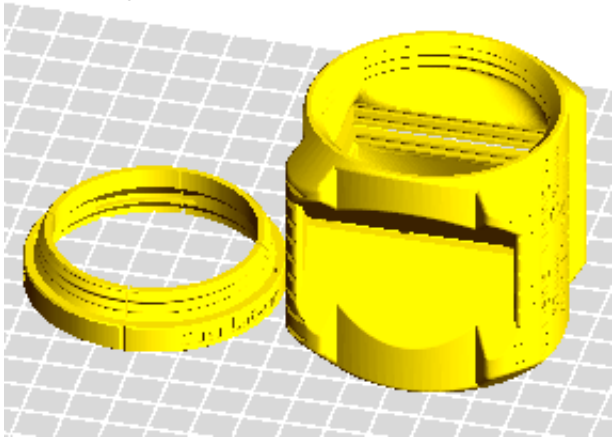

Telepresence Visitors 1: Les Hall is going to teach a class on Arduino programming next Saturday. But Les is stuck in an assisted living facility in New Braunfels. OK fine, he'll just phone it in. We worked out how to use Google Hangouts to share Les'

screen with the class. Some USB powered speakers, a big screen TV, 2 Macbooks, 2 iPhones, 2 HotSpots, cables, adaptors, gmail logins, friends registration, 24 point font . . . tada: perfect HiDef clarity readable in the back row.

BTW, if you want to learn Arduino Programming, do come to the class, next Saturday June 20. 3:-4: PM. 10BitWorks Studio room. Price Free. BYO laptop if you've got one. Invite your friends.

Immediately following the class is 10BitWorks 5th Birthday Party. Grill some burgers, tell some hacker tales. Saturday June 20. 4:-9: PM.

Spread the word.

Don S